LG
Life's Good

OWNER'S MANUAL
LED LCD Monitor (LED Monitor*)

*LG LED Monitors are LCD Monitors with LED Backlighting.

Please read this manual carefully before operating your set and retain it for future reference.

LED LCD MONITOR MODEL
20MK4 series

www.lg.com

ENGLISH

CONTENTS

LICENSE ---------- 3

ASSEMBLING AND PREPARING - 4

- Product Components ---------- 4
- Supported Drivers and Software ---------- 5
- Component and Button Description ---------- 6
  How to Use the Joystick Button
  Input Connector
- Moving and Lifting the Monitor ---------- 8
- Setting up the Monitor set ---------- 9
  Attaching the Stand Base
  Mounting on a table
  Mounting on a wall

USING THE MONITOR SET------ 13

- Connecting to a PC ----------13
  D-SUB connection

CUSTOMIZING SETTINGS ------ 14

TROUBLESHOOTING ---------- 18

SPECIFICATIONS ---------- 19

- Preset Modes (Resolution) ----------20

PROPER POSTURE ----------21

- Proper Posture ---------- 21

LICENSE

Each model has different licenses. Visit www.lg.com for more information on the license.

The following content is only applied to the monitor which is sold in Europe market and which needs to meet the ErP Directive:
* This monitor is set to be turned off automatically in 4 hours after you turned on display if there is no adjustment to display.
* To make this setting be disabled, change the option to 'Off' in OSD menu of "Automatic Standby".

ASSEMBLING AND PREPARING

Product Components

(Images may vary depending on models)

Please check whether all the components are included in the box before using the product. If there are missing components, contact the retail store where you purchased the product. Note that the product and components may look different from those shown here.

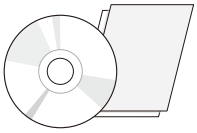

CD(Owner's Manual) / Card
(Depending on the country)

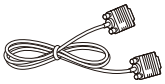

D-SUB Cable
(Depending on the country)

Power Cord

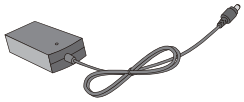

AC-DC Adapter

(Depending on the country)

or

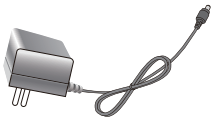

AC-DC Adapter
(Depending on the country)

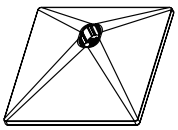

Stand Base

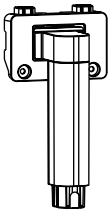

Stand Body

2 Screws

CAUTION

- Always use genuine components to ensure safety and product performance.
- The product warranty will not cover damage or injury caused by the use of counterfeit components.
- It is recommend that use the supplied components.
- If you use generic cables not certified by LG, the screen may not display or there may be image noises.

NOTE

- Note that the components may look different from those shown here.
- Without prior notice, all information and specifications in this manual are subject to change to improve the performance of the product.
- To purchase optional accessories, visit an electronics store or online shopping site or contact the retail store where you purchased the product.

Supported Drivers and Software

Check the drivers and software supported by your product and refer to the manuals on the CD enclosed in the product package.

Drivers and Software	Installation Priority	20MK4 series
Monitor Driver	Recommended	O
OnScreen Control	Recommended	O

- Required and Recommended: You can download and install the latest version from the enclosed CD or from the LGE website (www.lg.com).
- Optional: You can download and install the latest version from the LGE website (www.lg.com).

Component and Button Description

(Images may vary depending on models)

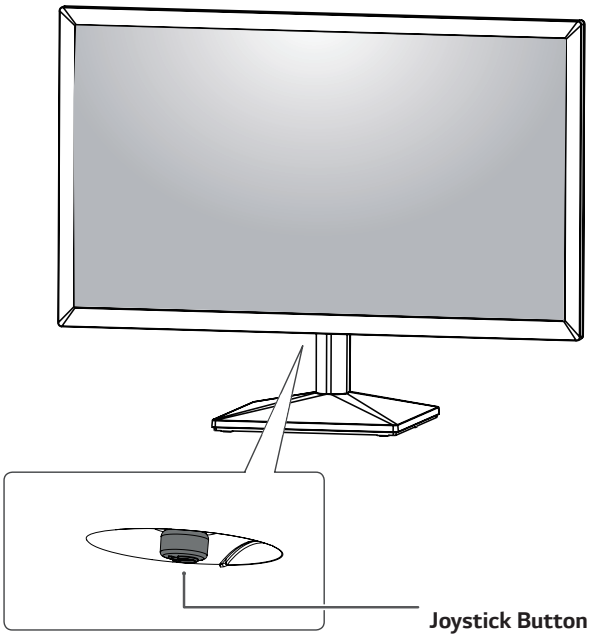

How to Use the Joystick Button

You can easily control the functions of the monitor by pressing the joystick button or moving it left/right with your finger.

Basic Functions

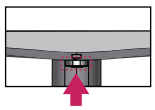		**Power on**	Press the joystick button once with your finger to turn on the monitor.
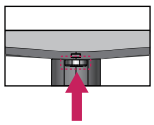		**Power off**	Press and hold the joystick button once with your finger to turn off the monitor.

NOTE

- The joystick button is located at the bottom of the monitor.

Input Connector

(Images may vary depending on models)

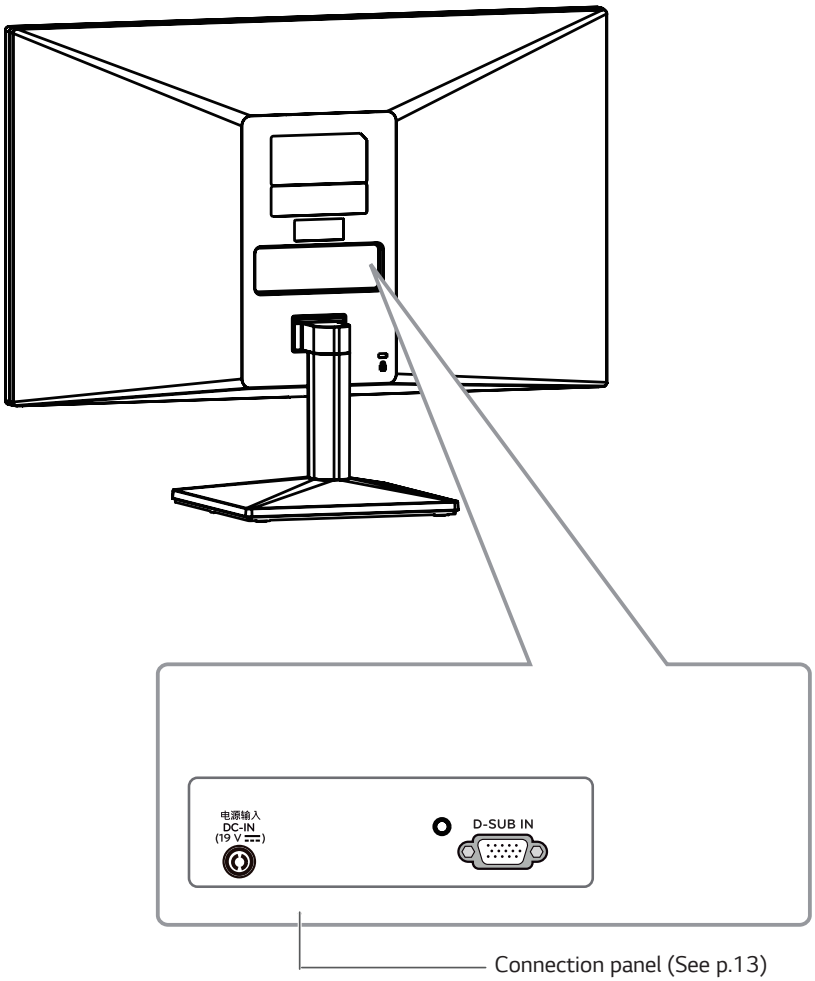

Moving and Lifting the Monitor

When moving or lifting the monitor, follow these instructions to prevent the monitor from being scratched or damaged and to ensure safe transportation regardless of its shape or size.

- It is advisable to place the monitor in the original box or packing material before attempting to move it.
- Before moving or lifting the monitor, disconnect the power cord and all cables.
- Hold the top and bottom of the monitor frame firmly. Do not hold the panel itself.

(Images may vary depending on models)

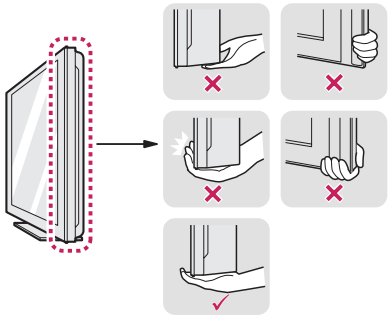

- When holding the monitor, the screen should face away from you to prevent it being scratched.

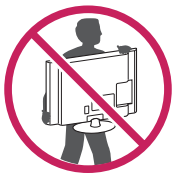

- When moving the monitor, avoid any strong shock or vibrations to the product.
- When moving the monitor, keep it upright, never turn the monitor on its side or tilt it sideways.

CAUTION

- As far as possible, avoid touching the monitor screen. This may result in damage to the screen or some of the pixels used to create images.

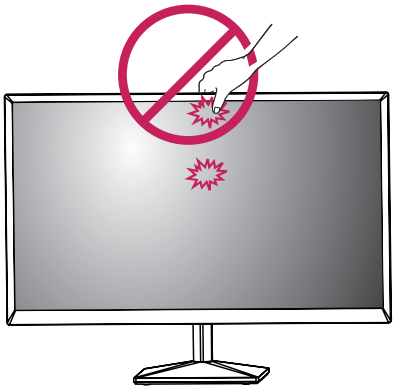

- If you use the monitor panel without the stand base, its joystick button may cause the monitor to become unstable and fall, resulting in damage to the monitor or human injury. In addition, this may cause the joystick button to malfunction.

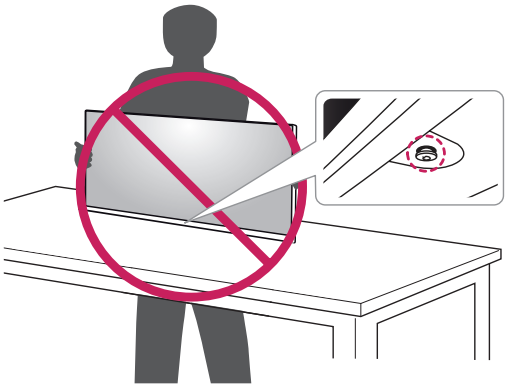

Setting up the Monitor set

(Images may vary depending on models)

Attaching the Stand Base

1 Place the Monitor set with the screen side down on a flat and cushioned suface.

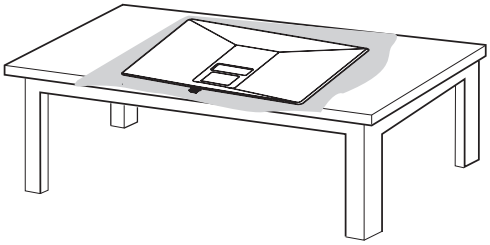

CAUTION

- To protect the screen from scratches, cover the surface with a soft cloth.

2 Attach the **Stand Body** to the monitor set.

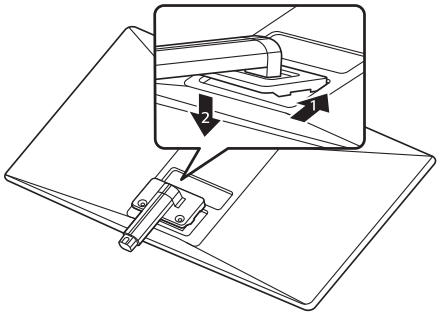

3 Tighten the screw.

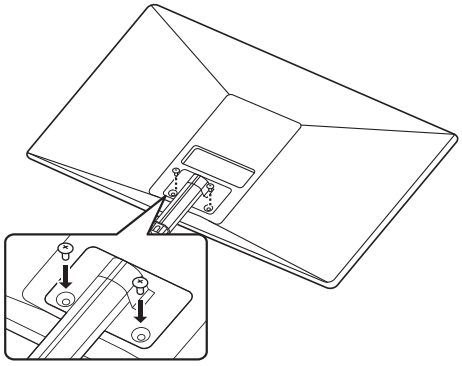

screw torque :10~12kgf

4 Tighten the screw to the right with a coin.

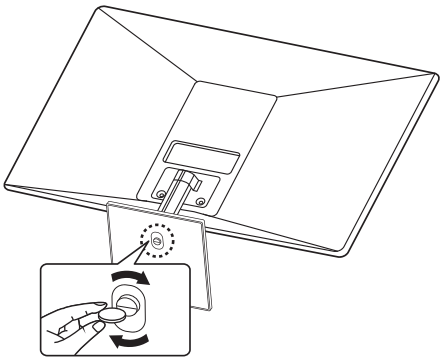

WARNING

- To avoid injury to the fingers and foot when Assembly Stand Body and Base, should hold Base when assembly stand body and base.

CAUTION

- Illustrations in this document represent typical procedures, so they may look different from the actual product.
- Do not carry the monitor upside down by just holding the stand base. This may cause the monitor to fall off the stand and could result in personal injury.
- When lifting or moving the monitor, do not touch the monitor screen. The force applied to the monitor screen may cause damage to it.
- Do not apply foreign substances (oils, lubricants, etc.) to the screw parts when assembling the product. (Doing so may damage the product.)
- Applying excessive force when tightening screws may cause damage to the monitor. Damage caused in this way will not be covered by the product warranty.

NOTE

- You can disassemble the stand in the reverse order of the assembly.

Mounting on a table

(Images may vary depending on models)

1 Lift and tilt the Monitor set into its upright position on a table.

Leave a 100 mm (minimum) space from the wall for proper ventilation.

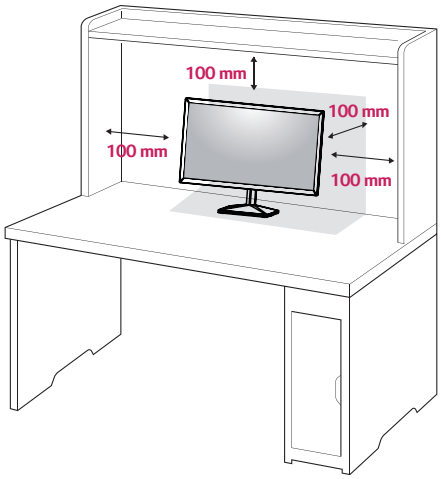

2 Connect the AC-DC Adapter and Power Cord to a wall outlet.

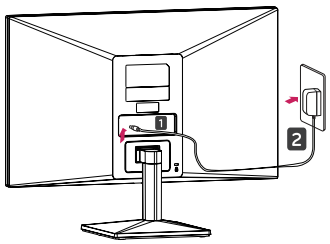

or

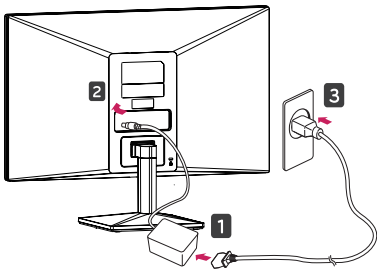

3 Press the joystick button on the bottom of the monitor to turn on the monitor.

CAUTION

- Unplug the power cord prior to moving or installing the monitor. There is risk of electric shock.

WARNING

When you adjust the angle, do not hold the bottom of the Monitor set frame as shown on the following illustration, as may injure your fingers.

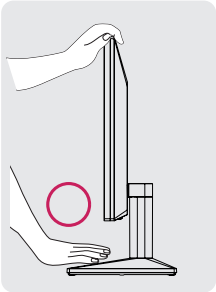

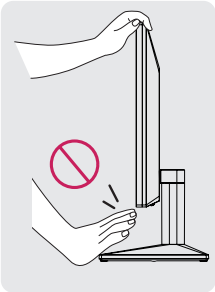

Do not touch or press the screen when adjusting the angle of the monitor.

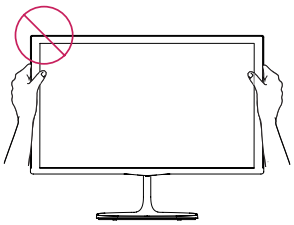

Do not hold this set like below picture.Monitor screen can detach from stand base and injure your body.

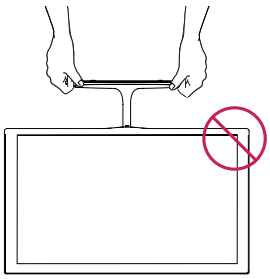

NOTE

The angle of the screen can be adjusted forward or backward from -5° to 20° for a comfortable viewing experience.

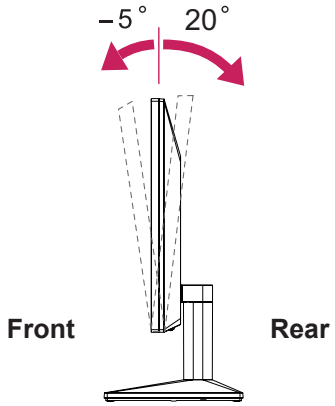

Using the Kensington security system

The Kensington security system connector is located at the back of the Monitor set. For more information of installation and using, refer to the manual supplied with the Kensington security system or visit *http://www.kensington.com*.

Connect the Kensington security system cable between the Monitor set and a table.

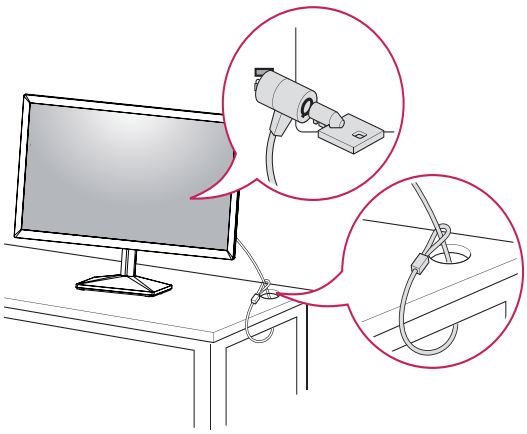

NOTE

- The Kensington security system is optional. You can obtain it from most electronics stores.

Mounting on a wall

(Images may vary depending on models)

For proper ventilation, allow a clearance of 100 mm on each side and from the wall. Detailed instructions are available from your dealer, see the optional Tilt Wall Mounting Bracket Installation and Setup Guide.

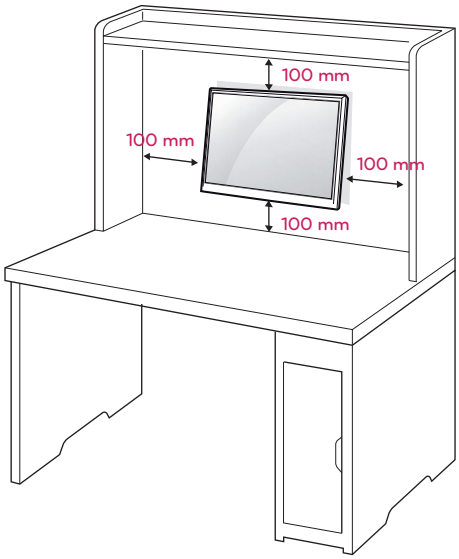

If you intend to mount the Monitor set to a wall, attach Wall mounting interface (optional parts) to the back of the set.
When you install the Monitor set using a wall mounting interface (optional parts), attach it carefully so it will not drop.

1 If you use screw longer than standard, the monitor might be damaged internally.
2 If you use improper screw, the product might be damaged and drop from mounted position.
In this case, LG Electronics is not responsible for it.

Model	20MK4 series
Wall Mount (A x B)	75 x 75
Standard screw	M4
Number of screws	4

- Wall Mount (A x B)

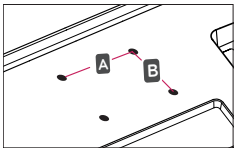

CAUTION

- Disconnect the power cord first, and then move or install the Monitor set. Otherwise electric shock may occur.
- If you install the Monitor set on a ceiling or slanted wall, it may fall and result in severe injury.
- Use only an authorized LG wall mount and contact the local dealer or qualified personnel.
- Do not over tighten the screws as this may cause damage to the Monitor set and void your warranty.
- Use only screws and wall mounts that meet the VESA standard. Any damages or injuries by misuse or using an improper accessory are not covered by the warranty.
- Screw length from outer surface of back cover should be under 8mm.

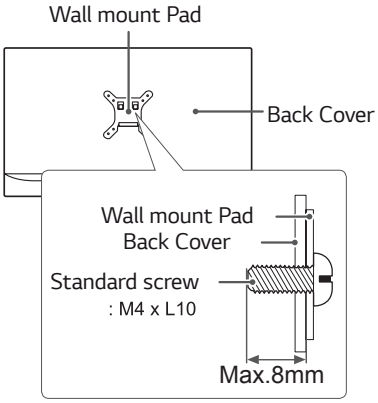

NOTE

- Use the screws that are listed on the VESA standard screw specifications.
- The wall mount kit will include an installation manual and necessary parts.
- The wall mount bracket is optional. You can obtain additional accessories from your local dealer.
- The length of screws may differ depending on the wall mount. Be sure to use the proper length.
- For more information, refer to the instructions supplied with the wall mount.

USING THE MONITOR SET

Connecting to a PC

- Your Monitor set supports Plug & Play*.
  *Plug & Play: A PC recognizes a connected device that users connect to a PC and turn on, without device configuration or user intervention.

D-SUB connection

Transmits analog video from your PC to the Monitor set. Connect the PC and the Monitor set with the supplied D-sub 15 pin signal cable as shown in the following illustrations.

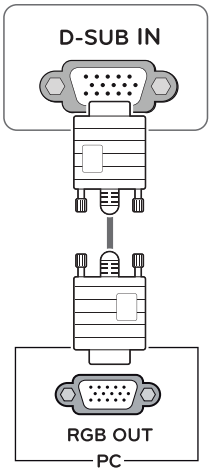

NOTE

- When using a D-Sub signal input cable connector for Macintosh

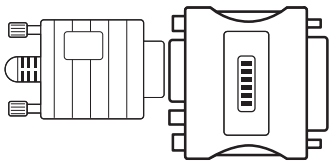

- **Mac adapter**
  For Apple Macintosh use, a separate plug adapter is needed to change the 15 pin high density (3 row) D-SUB VGA connector on the supplied cable to a 15 pin 2 row connector.

CUSTOMIZING SETTINGS

Activating the Main Menu

1 Press the joystick button on the bottom of the monitor.
2 Move the joystick up/down (▲/▼) and left/right(◀/▶) to set the options.
3 Press the joystick button once more to close the main menu.

Button	Menu Status		Description
	Main menu disabled		Enables the main menu.
	Main menu enabled		Close the main menu. (Long press the button to turn off the monitor)
	◀	**Main menu disabled**	Enables the main menu.
		Main menu enabled	Operates the Auto function.
	▶	**Main menu disabled**	Enables the main menu.
		Main menu enabled	Enters the Settings feature.
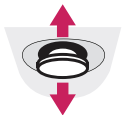	▲	**Main menu disabled**	Displays the information on the current input.
		Main menu enabled	Turns off the monitor.
	▼	**Main menu disabled**	Displays the information on the current input.
		Main menu enabled	Enters the picture mode feature.

Main Menu Features

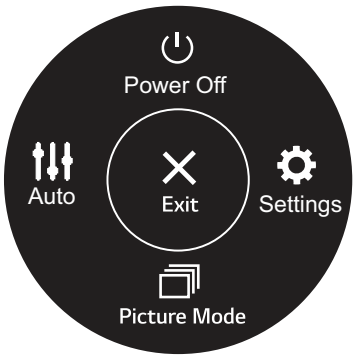

Main Menu	Description
Settings	Configures the screen settings.
Picture Mode	Select picture mode to achieve the best display effect.
Auto	Press the Auto button to automatically adjust your display image to the ideal setting. (Only supported in Analog Mode)
Power Off	Turns off the monitor.
Exit	Exits the main menu.

Customizing settings

Settings > Quick Settings	Description
Brightness	Adjusts the contrast and brightness of the screen.
Contrast	

Settings > Picture	Description		
Picture Mode	**Custom**	Allows the user to adjust each element. The color mode of the main menu can be adjusted.	
	Reader	Optimizes the screen for viewing documents. You can brighten the screen in the OSD menu.	
	Photo	Optimizes the screen to view photos.	
	Cinema	Optimizes the screen to improve the visual effects of a video.	
	Color Weakness	This mode is for users who cannot distinguish between red and green. It enables users with color weakness to easily distinguish between the two colors.	
	Game	Optimizes the screen for gameplay.	
Picture Adjust	**Brightness**	Adjusts the contrast and brightness of the screen.	
	Contrast		
	Sharpness	Adjusts the sharpness of the screen.	
	Aspect Ratio	Adjusts the aspect ratio of the screen.	
		Full Wide	Displays the video in wide-screen, regardless of the video signal input.
		Original	Displays video according to the aspect ratio of the video signal input.
	DFC	On	Adjusts the brightness automatically according to the screen.
		Off	Disables the DFC feature.

NOTE

- This is subsidiary for color weakness user. Therefore if you feel uncomfortable with the screen, please turn off this function.
- This function can't distinguish some colors in some images.

Game Adjust	**Black Stabilizer**	Black Stabilizer: You can control the black contrast to have better visibility in dark scenes. Increasing the Black Stabilizer value brightens the low gray level area on the screen. (You can easily distinguish objects on dark game screens.) Reducing the Black Stabilizer value darkens the low gray level area and increases the dynamic contrast on the screen.	
	Cross Hair	Cross Hair provides a mark on the center of the screen for First Person Shooter(FPS) games. Users can select the **cross hair** that fits their gaming environment among four different **cross hairs.** • When the monitor is off or enters energy saving mode, the Cross Hair feature is automatically turned **off**.	
Color Adjust	**Gamma**	**Mode 1, Mode 2, Mode 3**	The higher the gamma value, the darker the image becomes. Likewise, the lower the gamma value, the lighter the image becomes.
		Mode 4	If you do not need to adjust the gamma settings, select Mode 4.
	Color Temp	Selects the factory default picture color. Warm: Sets the screen color to a reddish tone. Medium: Sets the screen color between a red and blue tone. Cool: Sets the screen color to a bluish tone. Custom: The user can adjust it to red, green or blue by customization.	
	Red/Green/ Blue	You can customize the picture color using Red, Green, and Blue colors.	
Configuration Adjust	**Horizontal**	To move image left and right.	
	Vertical	To move image up and down.	
	Clock	To minimize any vertical bars or stripes visible on the screen background.The horizontal screen size will also change.	
	Phase	To adjust the focus of the display. This item allows you to remove any horizontal noise and clear or sharpen the image of characters.	
Resolution	User can set the desired resolution.This option is enabled only when the screen resolution on your computer is set to the following.		
	NOTE The function is enabled only when the screen resolution on your computer is set to the following, except that the PC output wrong resolution.		
	1024x768, 1280x768, 1360x768, 1366x768,Off		
Picture Reset	**Do you want to reset your settings?**		
	No	Cancel the select.	
	Yes	Returns to the default settings.	

Customizing settings

Settings > General	Description	
Language	To choose the language in which the control names are displayed.	
SMART ENERGY SAVING	**High**	Saves energy using the high-efficiency SMART ENERGY SAVING feature.
	Low	Saves energy using the low-efficiency SMART ENERGY SAVING feature.
	Off	Disables the SMART ENERGY SAVING feature.
OSD Lock	Prevents incorrect key input.	
	On	Key input is disabled.
	NOTE • All function except for the OSD Lock mode, brightness, Contrast, Input, Information and Volume are disabled.	
	Off	Key input is enabled.
Information	The display information will be shown the Model, Serial Number, Total Power On Time, Resolution.	
Reset	**Do you want to reset your settings?**	
	No	Cancel the select.
	Yes	Returns to the default settings.

NOTE

- Saving Data depends on the Panel. So, those values should be different from each panel and panel vendor. If option of SMART ENERGY SAVING is High or Low, monitor luminance become higher or lower depend on source.

TROUBLESHOOTING

Check the following before calling for service.

No image appears	
Is the power cord of the display connected?	• Check and see if the power cord is connected properly to the power outlet.
Do you see an "Out of Range" message on the screen?	• This message appears when the signal from the PC (video card) is out of horizontal or vertical frequency range of the display. See the 'Specifications' section of this manual and configure your display again.
Do you see a "NO SIGNAL" message on the screen or black screen?	• After the monitor is on "NO SIGNAL", the monitor goes to DPM mode. • This is displayed when the signal cable between the PC and the monitor is missing or disconnected. Check the cable and reconnect it. • Check PC status.

Can 't you control some functions in OSD?	
Can't you select some menu in OSD?	• You can unlock the OSD controls at any time by entering the OSD lock menu and changing items to off.

CAUTION

- Check **Control Panel ▶ Display ▶ Settings** and see if the frequency or the resolution were changed. If yes, readjust the video card to the recommend resolution.
- If the recommended resolution (optimal resolution) is not selected, letters may be blurred and the screen may be dimmed, truncated or biased. Make sure to select the recommend resolution.
- The setting method can differ by computer and O/S (Operation System), and resolution mentioned above may not be supported by the video card performance. In this case, please ask to the computer or the video card manufacturer.
- Keep proper posture when using the monitor, otherwise the screen may not be optimized.

Display image is incorrect	
The screen color is mono or abnormal.	• Check if the signal cable is properly connected and use a screwdriver to fasten if necessary. • Make sure the video card is properly inserted in the slot. • Set the color setting higher than 24 bits (true color) at **Control Panel ▶ Settings**.
The screen blinks.	• Check if the screen is set to interlace mode and if yes, change it to the recommend resolution.

Do you see an "Unrecognized monitor, Plug&Play (VESA DDC) monitor found" message?	
Have you installed the display driver?	• Be sure to install the display driver from the display driver CD (or diskette) that comes with your display. Or, you can also download the driver from our website: http://www.lg.com. • Make sure to check if the video card supports Plug&Play function.

SPECIFICATIONS

20MK4 series

LCD Screen	Type	TFT (Thin Film Transistor) LCD(Liquid Crystal Display) Screen
	Pixel Pitch	0.3177 mm x 0.307 mm
Resolution	Maximum Resolution	1366 x 768 @ 60Hz
	Recommended Resolution	1366 x 768 @ 60Hz
Video Signal	Horizontal Frequency	30 kHz to 61 kHz
	Vertical Frequency	D-SUB: 56 Hz to 75 Hz
	Synchronization	Separate Sync
Input Connector	D-SUB IN	
Power Input	19 V ⎓ 0.8 A	
Power Consumption	On Mode : 13 W Typ. (Outgoing condition) * Sleep Mode ≤ 0.3 W Off Mode ≤ 0.3 W	
AC/DC adaptor	Type ADS-18SG-19-3 19016G, manufactured by SHENZHEN HONOR ELECTRONIC or Type ADS-18FSG-19 19016GPG, manufactured by SHENZHEN HONOR ELECTRONIC or Type ADS-18FSG-19 19016GPI, manufactured by SHENZHEN HONOR ELECTRONIC or Type ADS-18FSG-19 19016GPCU, manufactured by SHENZHEN HONOR ELECTRONIC or Type ADS-18FSG-19 19016GPB, manufactured by SHENZHEN HONOR ELECTRONIC or Type LCAP42, manufactured by LIEN CHANG ELECTRONIC ENTERPRISE or Type LCAP36-A, manufactured by LIEN CHANG ELECTRONIC ENTERPRISE or Type LCAP36-E, manufactured by LIEN CHANG ELECTRONIC ENTERPRISE or Type LCAP36-I, manufactured by LIEN CHANG ELECTRONIC ENTERPRISE or Type LCAP36-U, manufactured by LIEN CHANG ELECTRONIC ENTERPRISE or Type DA-16C19, manufactured by Asian Power Devices Inc. or Type WA-16D19FG, manufactured by Asian Power Devices Inc. or Type WA-16E19FA, manufactured by Asian Power Devices Inc.	
	OUTPUT: 19 V ⎓ 0.84 A	
Environmental conditions	Operating Temperature Operating Humidity	0 °C to 40 °C Less than 80%
	Storage Temperature Storage Humidity	-20 °C to 60 °C Less than 85 %
Dimension	Monitor Size (Width x Height x Depth)	
	With Stand	463.8 mm x 366.5 mm x 181.9 mm
	Without Stand	463.8 mm x 276.4 mm x 38.4 mm
Weight (Without Packaging)	With Stand	2.3 Kg
	Without Stand	2.0 Kg

Product specifications shown above may be changed without prior notice due to upgrade of product functions.
* The power consumption level can be different by operating condition and monitor setting.
* The On mode power consumption is measured with LGE test standard(Full White pattern , Maximum resolution).

Preset Modes (Resolution)

D-SUB Timing

Display Modes (Resolution)	Horizontal Frequency(kHz)	Vertical Frequency(Hz)	Polarity(H/V)	
720 x 400	31.468	70.08	-/+	
640 x 480	31.469	59.94	-/-	
640 x 480	37.5	75	-/-	
800 x 600	37.879	60.317	+/+	
800 x 600	46.875	75	+/+	
1024 x 768	48.363	60	-/-	
1366 x 768	47.712	59.79	+/+	**Recommend Mode**

PROPER POSTURE

Proper posture for using the Monitor set.

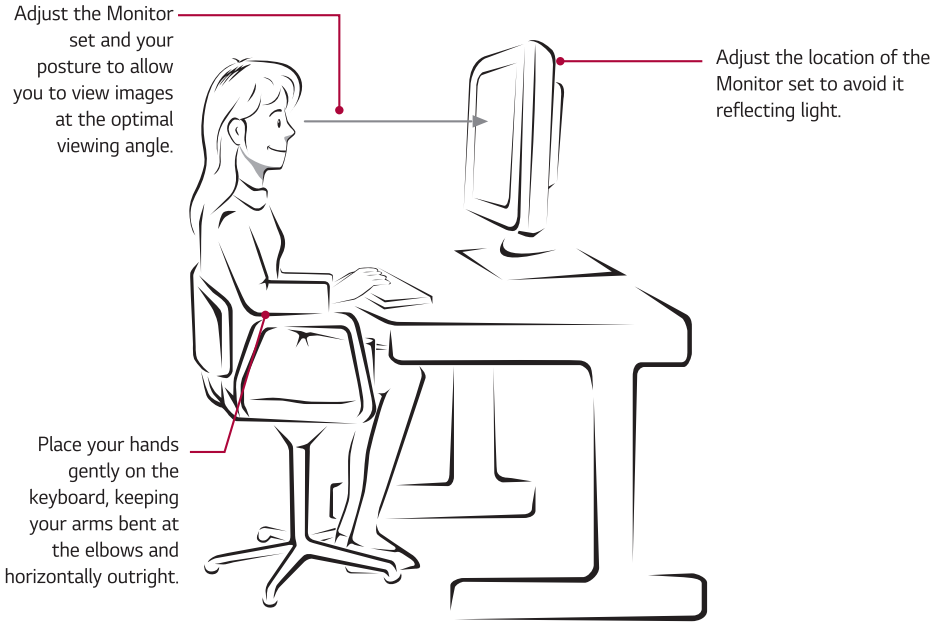

Make sure to read the Safety Precautions before using the product.
Keep the Owner's Manual (CD) in an accessible place for future reference.
The model and serial number of the SET is located on the back and one side of the SET. Record it below should you ever need service.

MODEL _____

SERIAL _____